Tokina

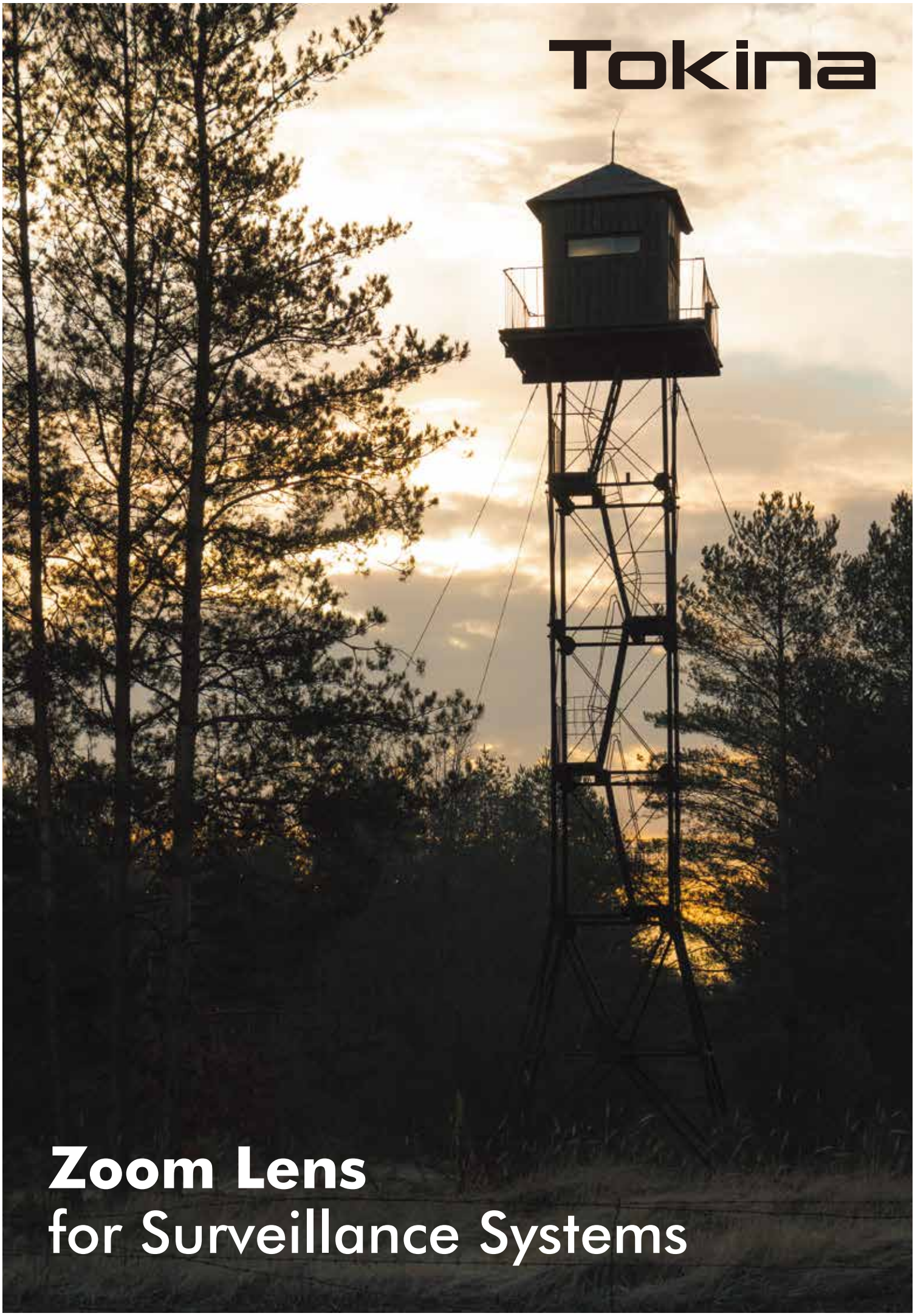

Zoom Lens
for Surveillance Systems

INDEX

■ **30X 50-1500mm TM30Z5050HD series**

■ **30X 25-750mm TM30Z2525HD series**

TM30Z5050HDDCPN-IR-iAF ——— 3, 4

TM30Z5050HDGAIDCPN-IR ——— 3, 4

TM30Z2525HDDCPN-IR-iAF ——— 3, 5

TM30Z2525HDGAIDCPN-IR ——— 3, 5

■ **50X 10-500mm TM50Z1046HDGAIDCPN-IR**

TM50Z1046HDGAIDCPN-IR ——— 6, 7

■ **33X 10-330mm TM33Z1015HD series**

TM33Z1015HDGAIDCPN-MP-iAF ——— 8

TM33Z1015HDGAIDCPN-MP ——— 8

■ **20X 12-240mm TM20Z1225HD series**

TM20Z1225HDGAIDCPN-IR ——— 9

TM20Z1225HDGAIPN-IR ——— 9

■ **RICOH / PENTAX H55Z series**

H55ZC-ME-F-HD-PRO1 ——— 10,11

H55ZBME-5F-HD ——— 10,11

■ **Full HD Compact PTZ Camera**

APTO-111 VORTY ——— 12

■ **Technical Information**

Auto Focus Motorized Zoom Lens ——— 13

IR Correction & Technical Information ——— 14,15

ICON LIST

*See also
P.13-15 for details

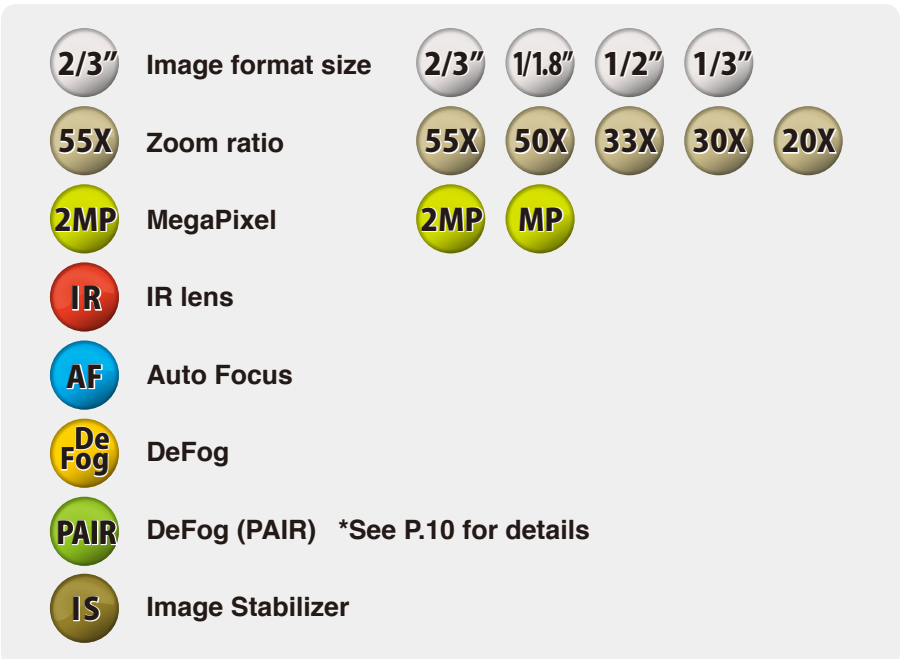

Super Telephoto Zoom Lens

30X 50-1500mm TM30Z5050HD series / 30X 25-750mm TM30Z2525HD series

Optimum for border control, harbor facilities, oil plants, highway monitoring, etc.

TM30Z5050HDDCPN-IR-iAF NEW

2/3" f = 50 - 1500mm F 5.0
2/3" Angle of View W 10.01 - T 0.34°
1/2" Angle of View W 7.31 - T 0.25°

TM30Z2525HDDCPN-IR-iAF NEW

2/3" f = 25 - 750mm F 2.5
2/3" Angle of View W 19.76 - T 0.69°
1/2" Angle of View W 14.51 - T 0.50°

TM30Z5050HDGAIDCPN-IR

2/3" f = 50 - 1500mm F 5.0
2/3" Angle of View W 10.01 - T 0.34°
1/2" Angle of View W 7.31 - T 0.25°

TM30Z2525HDGAIDCPN-IR

2/3" f = 25 - 750mm F 2.5
2/3" Angle of View W 19.76 - T 0.69°
1/2" Angle of View W 14.51 - T 0.50°

FEATURE

- Super-telephoto zoom lens for long range surveillance
- Full HD (25 - 750mm), HD (50 - 1500mm)
- IR correction, no focus shift through day and night
- DeFog by IR pass filter
  Filter switcher equipped, 1 clear glass, 2 ND filters and 1 IR pass filter
- Thermal compensator to stay in focus despite of temperature change
- Preset on focus and zoom
- Remote iris control
- Optical axis adjustment
- Auto Focus (TM30Z5050HDDCPN-IR-iAF & TM30Z2525HDDCPN-IR-iAF)

TM30Z5050HDDCPN-IR-iAF (Tele)

TM30Z2525HDDCPN-IR-iAF (DeFog OFF)

TM30Z2525HDDCPN-IR-iAF (DeFog ON)

30X 50-1500mm TM30Z5050HD series

TM30Z5050HDDCPN-IR-iAF NEW TM30Z5050HDGAIDCPN-IR

2/3" 30X MP

IR AF DeFog

TM30Z5050HDDCPN-IR-iAF (Wide)

TM30Z5050HDDCPN-IR-iAF (Tele)
Distance: 2.2km

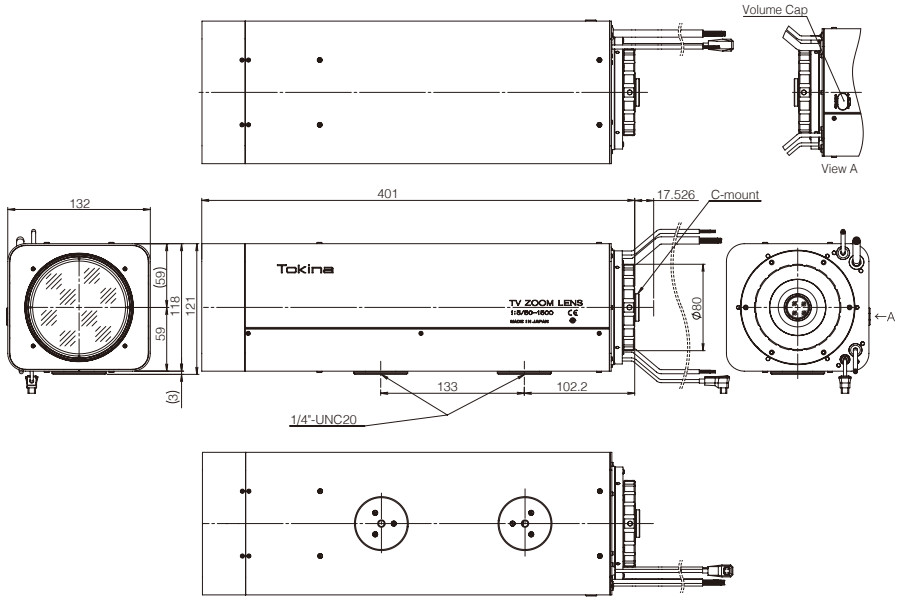

			Auto Focus	
Model Name			TM30Z5050HDDCPN-IR-iAF	TM30Z5050HDGAIDCPN-IR
Image Format			2/3"	
Mount			C	
Focal Length			50 - 1500mm	
Aperture Range			F5.0 - T110 - Close	
Zoom			x30	
M.O.D.			5.0m	
Angle of View H x V	2/3"	Wide	10.01° x 7.53°	
		Tele	0.34° x 0.26°	
	1/2"	Wide	7.31° x 5.49°	
		Tele	0.25° x 0.19°	
Operating	Iris		DC Auto Iris	
	Focus		Motorized w/preset	
	Zoom		Motorized w/preset	
Iris (DC Auto)	Drive coil		190Ω ±10% (20°C)	
			Close to Open: 4.0V (20°C)	
			Open to Close: 0.5V (20°C)	
	Damp coil		1110Ω ±10% (20°C)	
Focus	Input voltage		DC+6V~12V	
	Current consumption		80mA or less	
	Controlled speed		Approx. 10 sec. (12V)	Approx. 6 sec. (12V)
Auto Focus	Input voltage		DC 12±10%	–
	Input signal		VBS or CVBS SIGNAL (NTSC or PAL)	–
	Current consumption		500mA or less	–
Control			RS-232C	–
Zoom	Input voltage		DC+12V or less	
	Current consumption		90mA or less	
	Controlled speed		Approx. 9 sec. (12V)	Approx. 5 sec. (12V)
Filter size			M95mm P=1.0	
Back Focal Length			34.2mm	
Operating Temperature Range			-5°C ~ +45°C	-10°C ~ +50°C
Dimensions (W x H x L)			132 x 121 x 401mm	
Weight			6500g	6300g
Note			IR (Day/Night), MegaPixel, DeFog, Thermal compensator	

30X 25-750mm TM30Z2525HD series

TM30Z2525HDDCPN-IR-iAF NEW TM30Z2525HDGAIDCPN-IR

2/3" 30X 2MP

IR AF DeFog

TM30Z2525HDDCPN-IR-iAF (Wide)

TM30Z2525HDDCPN-IR-iAF (Tele)
Distance: 7.6km

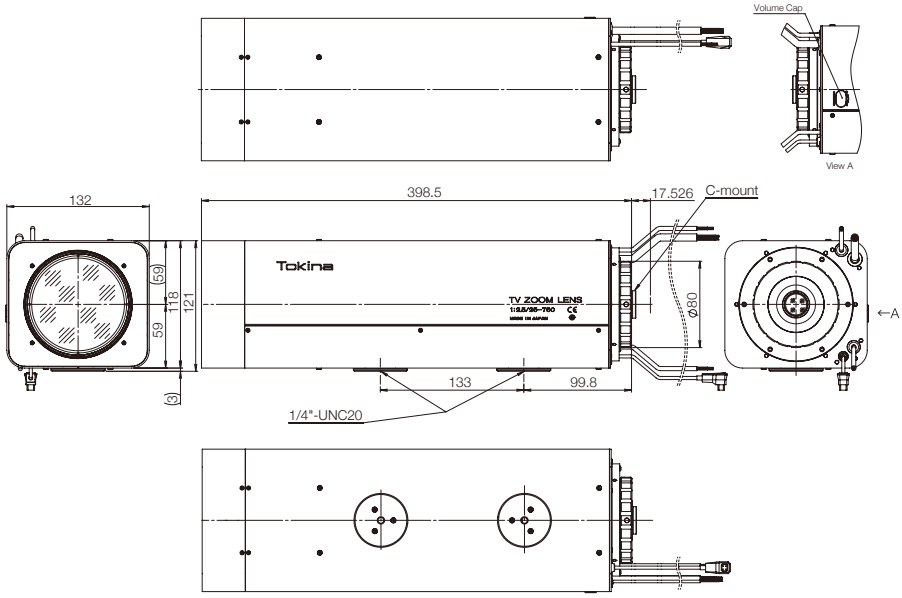

Auto Focus

Model Name			TM30Z2525HDDCPN-IR-iAF	TM30Z2525HDGAIDCPN-IR
Image Format			2/3"	
Mount			C	
Focal Length			25 - 750mm	
Aperture Range			F2.5 - T170 - Close	
Zoom			x30	
M.O.D.			5.0m	
Angle of View H x V	2/3"	Wide	19.76° x 14.96°	
		Tele	0.69° x 0.52°	
	1/2"	Wide	14.51° x 10.94°	
		Tele	0.50° x 0.38°	
Operating	Iris		DC Auto Iris	
	Focus		Motorized w/preset	
	Zoom		Motorized w/preset	
Iris (DC Auto)	Drive coil		190Ω ±10% (20°C)	
			Close to Open: 4.0V (20°C)	
			Open to Close: 0.5V (20°C)	
	Damp coil		1110Ω ±10% (20°C)	
Focus	Input voltage		DC+12V or less	
	Current consumption		80mA or less	
	Controlled speed		Approx. 10 sec. (12V)	Approx. 6 sec. (12V)
Auto Focus	Input voltage		DC 12±10%	–
	Input signal		VBS or CVBS SIGNAL (NTSC or PAL)	–
	Current consumption		300mA or less	–
Control			RS-232C	–
Zoom	Input voltage		DC+6V~12V or less	
	Current consumption		90mA or less	
	Controlled speed		Approx. 9 sec. (12V)	Approx. 5 sec. (12V)
Filter size			M95mm P=1.0	
Back Focal Length			34.2mm	
Operating Temperature Range			-5°C ~ +45°C	-10°C ~ +50°C
Dimensions (W x H x L)			132 x 121 x 398.5mm	
Weight			6500g	6300g
Note			IR (Day/Night), 2MegaPixel, DeFog, Thermal compensator	

Compact & High Power 50X HD Zoom Lens

50X 10-500mm TM50Z1046HDGAIDCPN-IR

Optimum for highway, airway, vessel traffic control, border and critical area surveillance.

TM55Z1038 Series(10-550mm L:298.5mm)

TM50Z1046(10-500mm L:175.5mm)

TM50Z1046HDGAIDCPN-IR

1/1.8" f = 10 - 500mm F 4.6
1/1.8" Angle of View W 36.54 - T 0.83°
1/2" Angle of View W 32.71 - T 0.74°

FEATURE

- Telephoto Zoom Lens for long range surveillance
- Compact size, only 175.5mm length
- Full HD resolution
- IR correction, no focus shift through day and night
- DeFog by IR pass filter switcher
- Preset on focus and zoom

TM50Z1046HDGAIDCPN-IR (Wide)

TM50Z1046HDGAIDCPN-IR (Tele)
Distance: 3.5km

50X 10-500mm TM50Z1046HDGAIDCPN-IR

TM50Z1046HDGAIDCPN-IR

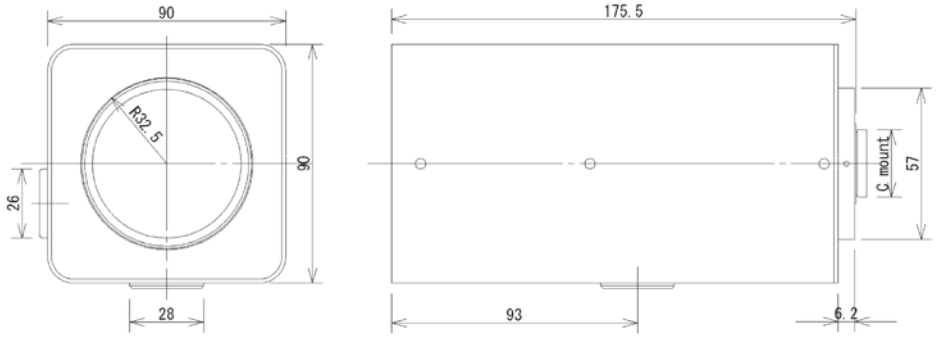

Model Name			**TM50Z1046HDGAIDCPN-IR**
Image Format			1/1.8"
Mount			C
Focal Length			10 - 500mm
Aperture Range			F4.6 - 360
Zoom			x50
M.O.D.			5.0m
Angle of View H x V	1/1.8"	Wide	36.54° x 27.82°
		Tele	0.83° x 0.63°
	1/2"	Wide	32.71° x 24.82°
		Tele	0.74° x 0.56°
Operating	Iris		DC Auto Iris
	Focus		Motorized w/preset
	Zoom		Motorized w/preset
Iris (DC Auto)	Drive coil		190Ω ±10% (20°C)
			Close to Open: 4.0V (20°C)
			Open to Close: 0.5V (20°C)
	Damp coil		1150Ω ±10% (20°C)
Focus	Input voltage		DC6V~DC12V
	Current consumption		30mA or less
	Controlled speed		Approx. 8 sec. (6V)
Zoom	Input voltage		DC6V~DC12V
	Current consumption		35mA or less
	Controlled speed		Approx. 6 sec. (6V)
Filter size			M65mm P=0.75
Back Focal Length			36.5mm
Operating Temperature Range			-10°C ~ +50°C
Dimensions (W x H x L)			90 x 90 x 175.5mm
Weight			Approx. 1640g
Note			IR (Day/Night), 2MegaPixel, DeFog

33X 10-330mm TM33Z1015HD series

TM33Z1015HDGAIDCPN-MP-iAF TM33Z1015HDGAIDCPN-MP

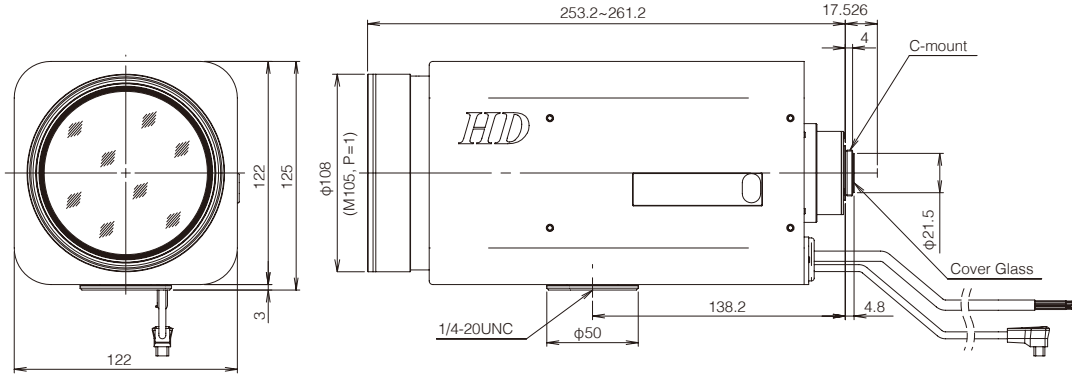

			Auto Focus		
Model Name			TM33Z1015HDGAIDCPN-MP-iAF(CONT)	TM33Z1015HDGAIDCPN-MP-iAF(232C)	TM33Z1015HDGAIDCPN-MP
Image Format			1/2"		
Mount			C		
Focal Length			10 - 330mm		
Aperture Range			F1.5 - 360		F1.5 - 560
Zoom			x33		
M.O.D.			2.9m		
Angle of View H x V	1/2"	Wide	34.99° x 26.44°		
		Tele	1.13° x 0.85°		
	1/3"	Wide	26.44° x 19.91°		
		Tele	0.85° x 0.64°		
Operating	Iris		DC Auto Iris		
	Focus		Motorized w/preset		
	Zoom		Motorized w/preset		
Iris (DC Auto)	Drive coil		190Ω ±10% (20°C)		
			Close to Open: 4.0V (20°C)		
			Open to Close: 0.5V (20°C)		
	Damp coil		500Ω ±10% (20°C)		
Focus	Input voltage		DC8V		
	Current consumption		60mA or less		
	Controlled speed		Approx. 9.5 sec.		
Auto Focus	Input voltage		DC 12±0.5V		–
	Input signal		VBS or CVBS SIGNAL (NTSC or PAL)		–
	Current consumption		300mA or less (Standby), 140mA or less (Zoom or Focus on)		–
Control			Controller	RS-232C	–
Zoom	Input voltage		DC8V		
	Current consumption		80mA or less		
	Controlled speed		Approx. 5 sec.		
Filter size			M105mm P=1.0		
Back Focal Length			11.0mm		
Operating Temperature Range			-5°C ~ +45°C		-10°C ~ +50°C
Dimensions (W x H x L)			122 x 125 x 260.5mm		
Weight			3000g		2900g
Note			MegaPixel		

20X 12-240mm TM20Z1225HD series

TM20Z1225HDGAIDCPN-IR TM20Z1225HDGAIPN-IR

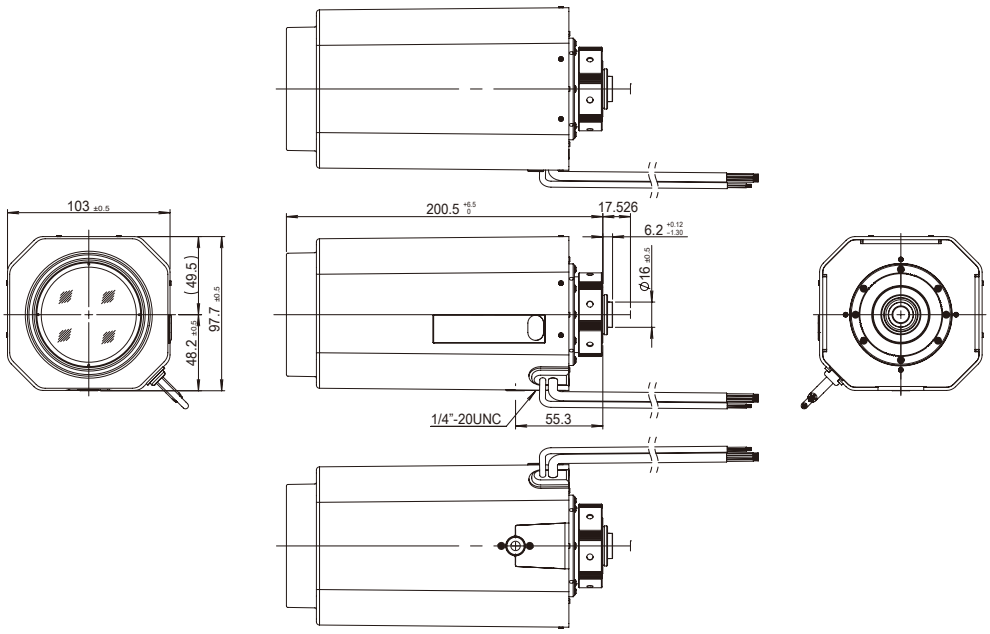

Model Name			TM20Z1225HDGAIDCPN-IR	TM20Z1225HDGAIPN-IR
Image Format			1/2"	
Mount			C	
Focal Length			12 - 240mm	
Aperture Range			F2.5 - 540 - Close	
Zoom			x20	
M.O.D.			2.0m	
Angle of View H x V	1/2"	Wide	29.16°x 22.07°	
		Tele	1.56°x 1.17°	
	1/3"	Wide	22.62°x 17.06°	
		Tele	1.15°x 0.86°	
Operating	Iris		DC Auto Iris	Video Auto Iris / Manual Override
	Focus		Motorized w/preset	
	Zoom		Motorized w/preset	
Iris (Video Auto/Manual Override)	Input voltage		–	DC6V-12V
	Current consumption		–	50mA or less
	Input signal		–	VS or V Signal
	Accuracy		–	±5% at Video Signal Level
	Sensitivity		–	0.5 ~ 1.0Vp-p
	Response speed		–	Approx. 5 sec.
Iris (DC Auto)	Drive coil		190Ω ±10% (20°C)	–
			Close to Open: 4.0V (20°C)	–
			Open to Close: 0.5V (20°C)	–
	Damp coil		1150Ω ±10% (20°C)	–
Focus	Input voltage		DC6V-12V	
	Current consumption		50mA or less	
	Controlled speed		Approx. 6 sec. (6V)	
Zoom	Input voltage		DC6V-12V	
	Current consumption		50mA or less	
	Controlled speed		Approx. 7 sec. (6V)	
Filter size			M67mm P=0.75	
Back Focal Length			13.029mm	
Operating Temperature Range			-10°C ~ +50°C	
Dimensions (W x H x L)			103 x 97.5 x 200.5mm	
Weight			1600g	
Note			IR (Day/Night), 2MegaPixel	

RICOH / PENTAX H55Z Series

H55ZC-ME-F-HD-PRO1 *H55ZBME-5F-HD*

PAIR: PENTAX Atmospheric Interference Reduction

FEATURE

- Effective not only for fog and rain, but also airborne particles of sand, smoke and snow
- Re-introduces color from degraded images in real time
- Auto focus function improves the ultra-telephoto zoom lens operation
- The integrated electronic image stabilizer
- Contained within the lens, the system is suitable for any camera
- instantly renders clear images when switching from one image to the next in joint surveillance systems

- Optimized for use in Port Facilities, Border Patrol, Coast Oil Fields, Highway Monitoring etc.
- Up to 1,680 mm Focal Range
- HD Resolution
- MegaPixel
- High Speed Motors
- 1/2" C-Mount
- Iris Override

Fog

Image Stabilizer

H55ZC-ME-F-HD-PRO1

H55ZBME-5F-HD

55X 12-660mm H55Z series

H55ZC-ME-F-HD-PRO1 H55ZBME-5F-HD

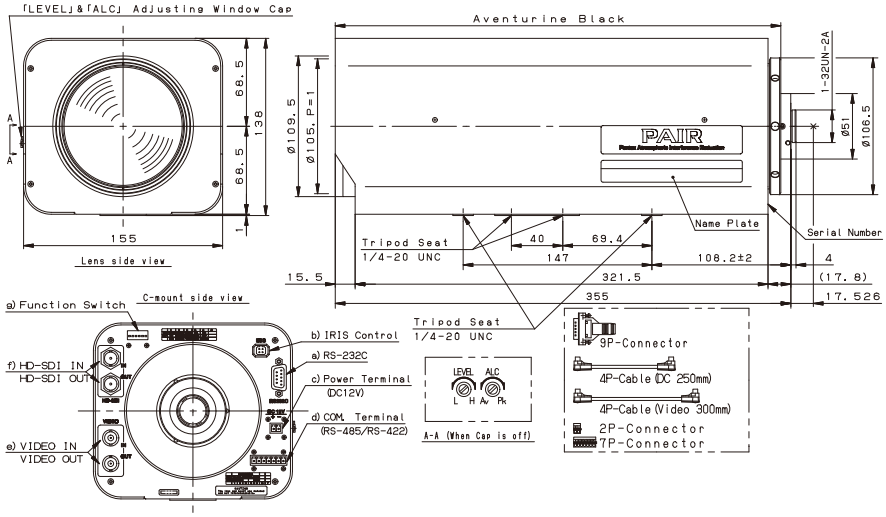

Auto Focus

Model Name			H55ZC-ME-F-HD-PRO1	**H55ZBME-5F-HD**(Version without PAIR)
Image Format			1/2"	
Mount			C	
Focal Length [( )=2.5X EXT]			12 - 660mm (30.5 - 1680mm)	
Aperture Range [( )=2.5X EXT]			F4.0 - 360	
Zoom			x55	
M.O.D.			7.0m	
Angle of View H x V [( )=2.5X EXT]	1/2"	Wide	31.1° x 22.9° (12.1° x 9°)	
			0.6° x 0.4° (0.2° x 0.2°)	
	1/3"	Tele	22.9° x 17° (9° x 6.8°)	
		Wide	0.4° x 0.3° (0.2° x 0.1°)	
Operating	Iris		Video Auto / DC Auto Iris	Video Auto Iris / Manual Override
	Focus		Motorized w/preset	
	Zoom		Motorized w/preset	
Iris (Video Auto/Manual Override)	Input voltage		DC12V	DC8V ~ DC15V
	Current consumption		50mA or less	
	Input signal		VS or V Signal	
	Accuracy		±20% at Video Signal Level	
	Sensitivity		0.5 ~ 1.0Vp-p	
	Response speed		Approx. 1.5 sec.	
Iris (DC Auto)	Drive coil		190Ω ±10% (20°C)	–
			Close to Open: 4.0V (25°C)	–
			Open to Close: 0.5V (25°C)	–
	Damp coil		1150Ω ±10% (20°C)	–
Focus	Input voltage		DC12V	
	Current consumption		50mA or less	
	Controlled speed		Approx. 5 sec. (Manual)	Approx. 5 sec.
Control			RS-232C,422,485	–
Zoom	Input voltage		DC12V	
	Current consumption		100mA or less	
	Controlled speed		Approx. 4.5 sec. (Manual)	Approx. 4.5 sec.
Extender	Input voltage		DC12V	
	Input signal		30mA or less	
	Current consumption		Approx. 2 sec.	
Filter size			M105mm P=1.0	
Back Focal Length			80.933mm	
Operating Temperature Range			-10°C ~ +50°C	
Dimensions (W x H x L)			155 x 138 x 355mm	
Weight			5960g	5630g
Note			MegaPixel, Image Stabilizer, DeFog(PAIR)	MegaPixel

Full HD Compact PTZ Camera

APTO-111 VORTY

- 360° Endless Panning
- High-Definition HD-SDI Output
- Near IR corrected (Day/Night)
- Auto Focus
- High Speed Pan-Tilt
  Max Speed: Horizontal 180°/sec
  Vertical 90°/sec
- Variety of protocols applicable

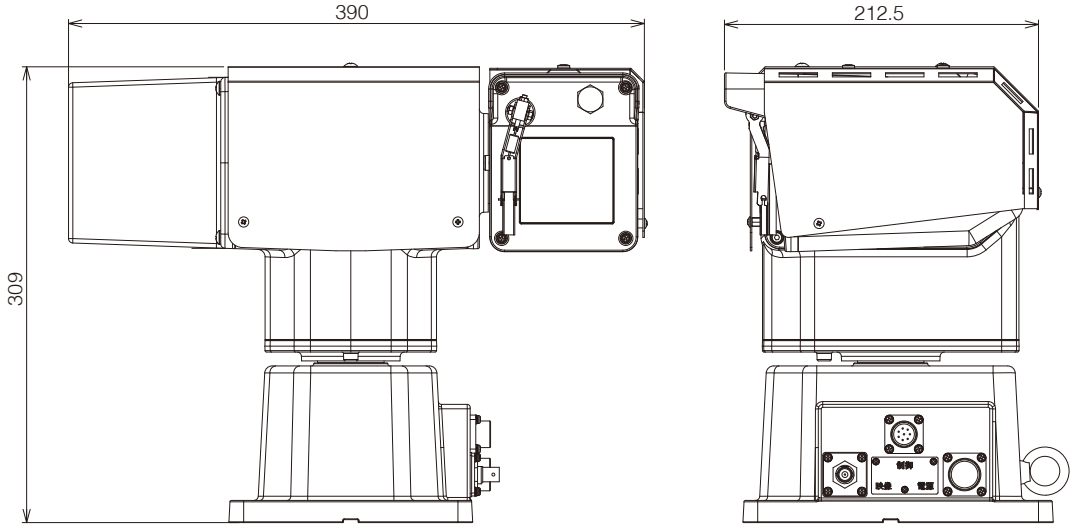

Specification : [PT : APTO-111 VORTY]		
Installation		Outdoor Upright
Comm. IF/Protocol		RS-422 (RS-485) / Pelco D and others
Housing Equipments		Wiper:Remote
		Defroster / fan / heater: Auto Control
		Optical 30x AF module
Water Proof		JIS C0920 Jet proof type compliant IP66
Wind Resistance	Normal	~ 20m/s
	Operation	~ 40m/s (Manual Control)
	Non-Dest.	~ 60m/s
Temperature		-10 ~ +50°C (with power, not frozen)
Humidity		30 ~ 90%RH (Relative, no condensation)
Color		N7 (Polyurethane paint) ※option available
Power		AC100V, 50Hz / 60Hz
Weight		Approx. 13kg
Option		• Communication I/F, Salt Resistance etc. • LED Illuminator • Visible and Near IR

Specification : [Camera]	
Image Sensor	1/3" CMOS 2MegaPixel
	1,920(H)x1,080(V) 30p/60i/59.94i
Video Output	HD-SDI(SMPTE292M)
Lens	f = 4.4 - 132mm F1.4 - 4.6 Optical 30x
Ange of View	H: 63.4° ~ 2.3° V: 37.3° ~ 1.3°
Min. Illumination	0.4Lux color 1/30sec F1.4 50IRE
	0.01Lux BW 1/8sec F1.4 50IRE
Other Function	Image Stabilizer, DeFog, HLC (Halation Control)

Specification : [Pan-Tilt]		
Pan-Tilt Range		H:360° Continuous V:±90°
PT Speed	H	Max. 180°/sec
	V	Max. 90°/sec
Precision		H•V:less than ±0.3°
No. of presets		Max. 255 (including home position)

Auto Focus Motorized Zoom Lens

1 Range Finding in 9 Divided Area

Typical

AF detection on only a center range-finding area

It takes time to autofocus and typical autofocusing has a limitation in accuracy.

iAF

Accurate AF detection by dividing the center range -finding area in 9 areas

iAF realizes high speed and highly accurate auto focusing.

2 AF Detection by Matrix

Typical

AF detection on only vertical direction

It takes time to autofocus and typical autofocusing has a limitation in accuracy.

iAF

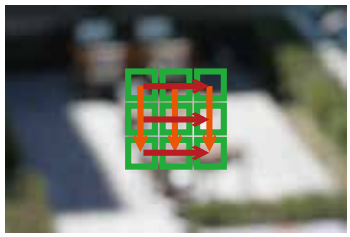

Accurate AF detection on horizontal and vertical matrix direction

iAF realizes high speed and highly accurate auto focusing.

3 Digital Processing

Typical

Normal speed AF detection with analog signal = Analog Processing

iAF

High speed AF detection with digitalized signal = Digital Processing

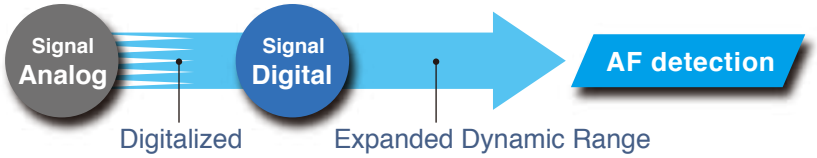

This provides you high speed and highly accurate auto focusing.

Precaution:

- iAF lenses can be used with IP cameras which have video output.
- Auto focus accuracy might be different according to using cameras.
- AF may not focus properly under conditions in below:
  - Low contrast object
  - Several same levels of contrast rate points in an object
  - When camera operates in accumulate mode

IR Correction & Technical Information

IR Correction

■ General Info

Recent technological progress in CCTV cameras produces "Day/Night or High Sensitivity HAD Cameras". This makes it possible to offer day time monitoring in color and night time monitoring in black and white. It also allows monitoring in total darkness when using infrared illumination.
However, conventional CCTV lenses cannot focus completely in the infrared area.

That is why Tokina has developed totally new Infrared Corrected (IR) Lens, a CCTV lens perfect to work with Day/Night or High Sensitivity HAD cameras.
Using a surveillance system that combines the Tokina IR lenses with Day/Night Cameras eliminates re-adjustment of the focus position.
Once focused, the image will remain perfectly sharp.
Day, Night or IR 24/7 in focus.

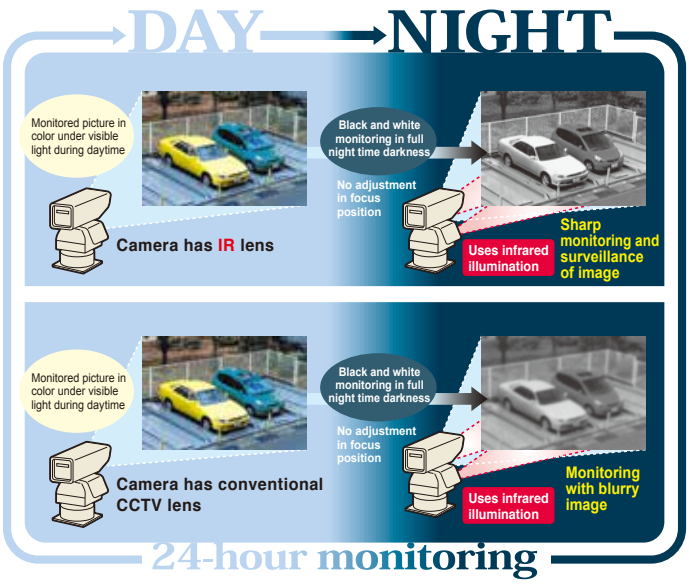

■ Near Infrared Lens Resolution

Since conventional CCTV lenses are being designed for the visible spectrum, using in the (near) infrared, image will appear blurry even after re-adjusting focus.
The TOKINA IR lens provides no focus shift between visible and near infrared light. Besides, it produces a clear image because it has extremely fine resolution in near infrared light.

IR (Day/Night)Lens

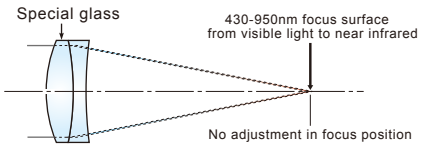

Standard CCTV Lens

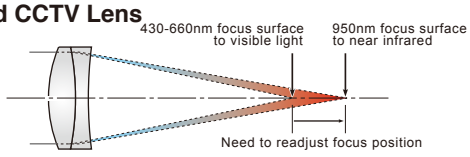

Technical Information

■ Image Format

There are three common image format sizes including 2/3 " , 1/2" and 1/3" corresponding to approximate diagonal length of image sensor as shown in the figures. A large image format lens may be used for smaller format devices, and will overfill the image sensor. In case of using a small format lens on a larger size device, it will result in vignetting. The field of view of a lens is determined by the focal length and the image format size.
The angle of view becomes wider when the image format is larger.

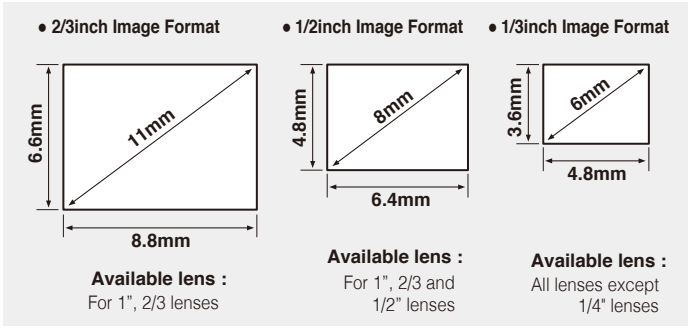

■ C-Mount & CS-Mount

CCTV lenses are usually used on C-mount or CS-mount. Both have same shape but with different flange focal length.
C-mount has 17.526mm and CS-mount has 12.5mm as flange focal length.

How to calculate the field of view $Y = \frac{\text{object distance} \times \text{image size}}{\text{focul length}}$

How to calculate the focal length $Y = \frac{\text{object distance} \times \text{image size}}{\text{object size}}$

■ Focal Length

Focal length is the distance from the 2nd principal point to focal point.
With short focal length the field of view will be larger. With long focal length, the field of view will be narrow.

■ F number

The F-number is an index of the amount of light that passes through a lens. The smaller the number is, the greater the amount of light becomes. The relationship during F-number, focal length and effective diameter can be calculated by the following formula.

F-number=f/A f=focal length A=effective diameter

Technical Information

■ Minimum object distance (M.O.D.)

The closest distance which a lens can focus on an object. Generally the smaller the focal length is, the shorter the M.O.D. becomes.
This distance can be altered with use of extension tubes.

■ Preset

This function allows a lens to feedback information regarding zoom and focus position to the controller when used with an appropriate controller.
The controller will quickly scan a preselected scene and adjust focusing on the proper point without operator intervention.

■ Back focal length & Flange focal length

Back focal length … The distance between the last lens element of the lens group and focal point.

Flange focal length … The distance between flange surface (the contact surface of camera and lens) and focal point.

Back / Flange focal length

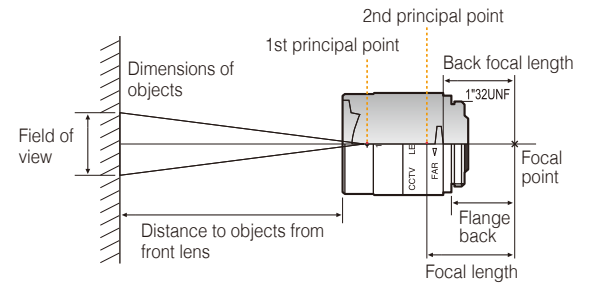

How to Adjust Flange Focal Length

① Please mount an ND filter on the front lens in order to open iris maximally. (It makes the depth of field shallow.)
② Zoom to wide angle position and focus on infinity for further object.
③ Focus on the object using flange focal distance adjustment of camera.
④ In case of defocusing at telephoto, focus on the object again.
⑤ Then, zoom to wide angle position and focus on the object again.
⑥ Repeat 4 and 5 until focusing correctly through the entire range.
If it dose not work, please check the following points.

A. Is the lens mount correct?
B. Is any extension tube attached?
C. Is the flange focal distance adjustment slipped?
Please contact us if you require support.

■ Iris

Auto Iris

Auto iris is driven, allowing it to adjust the iris automatically opening to incessant change in the amount of light throughout the day. There are two types of auto iris lenses: Video iris and DC iris.

1. Video Iris

Video iris type of lens features not only drive unit (galvanometer or DC motor) but also iris amplifier to control iris and adjust its level by receiving video analog signal from the camera. (Auto iris mode on the camera must be set to "Video iris".)

How to Adjust Iris (Video Iris)

① Sensitivity (level adjustment)
A. In case of bright image → rotate counter clockwise
B. In case of dark image → rotate clockwise
*Don't keep turning the volume. Otherwise the volume might come off.
② Contrast (ALC adjustment)
A. In case of high contrast → rotate counter clockwise
B. In case of low contrast → rotate clockwise
*Don't keep turning the volume. Otherwise the volume might come off.

1-2. Manual override

Even during operation of video iris, the specified inputting voltage at appointed wires on the driving cable ensures the arbitrary controlling of the iris.

2. DC Iris

DC iris type of lens does not have iris amplifier. The direct connection of drive unit (galvanometer) of the lens and the camera with built-in iris amplifier, the direct iris control becomes possible. (Auto iris mode on the camera must be set to "DC iris" and iris level must be adjusted on the camera.)

2-2. Manual control iris (available only TM30Z2525HD and TM30Z5050HD series)

The specified inputting voltage at appointed wires on the driving cable (or the specified communicating in RS-232C) ensures the switching the iris mode from "DC iris" to "manual iris" and arbitrary controlling of the iris in the "manual iris" mode.

■ DeFog

DeFog zoom lens features sophisticated IR pass optical filter to block the visible light and transmit only near-infrared light with the ability to provide crystal clear images even under adverse atmospheric conditions, such as fog, haze, dust, mist, rain or snowfall.

Although atmospheric particles scatter most of visible light with a shorter wavelength, near-infrared light passes through atmosphere and a fairly large portion of these rays reach the objective even under the adverse atmospheric conditions.

Kenko Tokina Co., Ltd.
KT Nakano Building, 5-68-10 Nakano
Nakano-ku, Tokyo 164-8616 JAPAN
Head office:
Tel +81-3-6840-3024 Fax +81-3-6840-2918
EMEA office:
Tel +49-4102-224-9925 Fax +49-4102-224-9647
http://www.tokina.co.jp/en

Project the fact. Tokina does.

Kenko Tokina